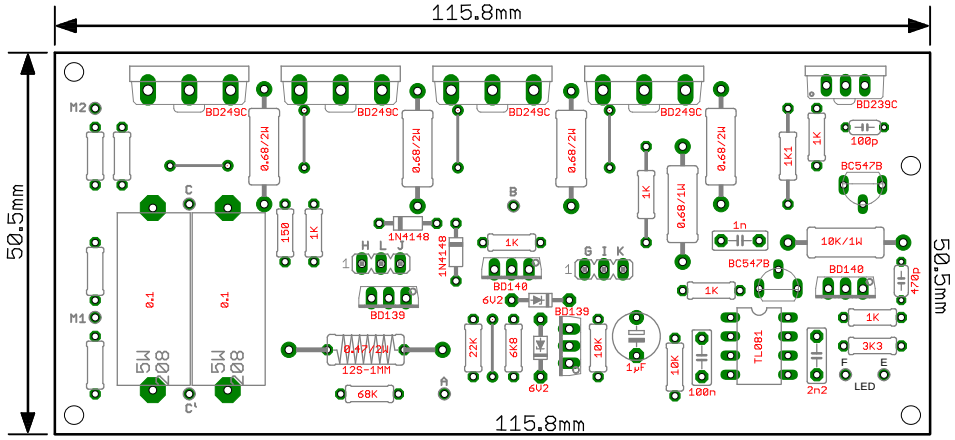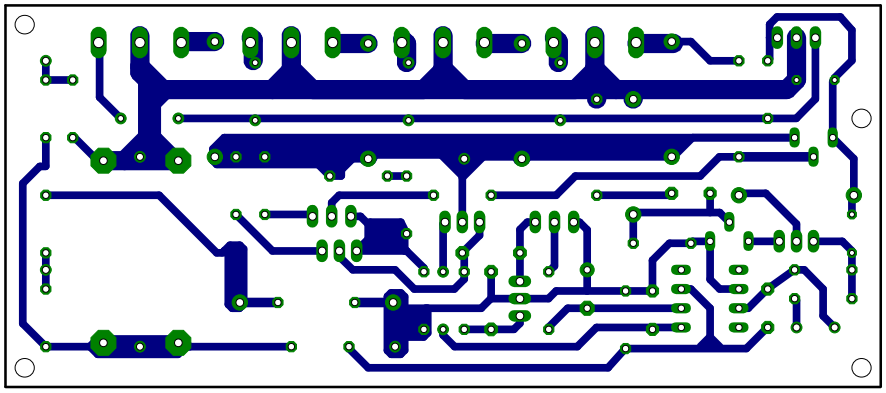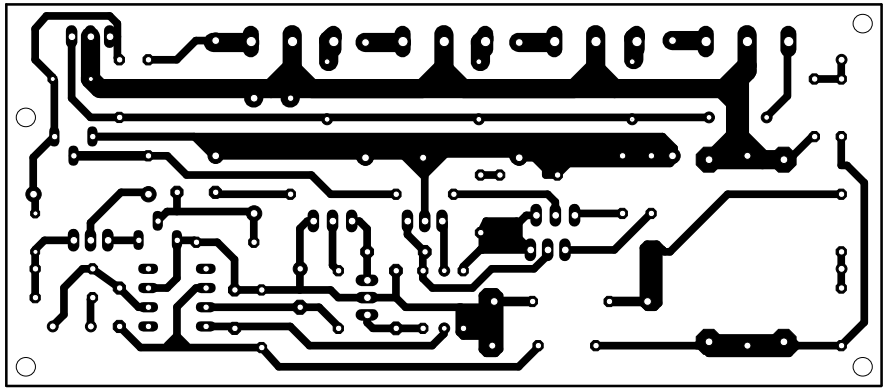
115.8mm
50.5mm
50.5mm
115.8mm
M2
M1
BD249C
BD249C
BD249C
BD249C
BD239C
0.68/2W
0.68/2W
0.68/2W
0.68/2W
0.68/1W
1K1
1K
100p
BC547B
150
1K
1N4148
1N4148
1K
BD140
6V2
BD139
BD139
1n
10K/1W
BC547B
BD140
470p
1K
1K
3K3
0.1
0.1
5W 208
5W 208
0.47/2W
12S-1MM
68K
22K
6K8
6V2
10K
1µF
10K
100n
TL081
2n2
LED